DIMENSION TRAINING WHEELS INSTRUCTIONS

Thanks for buying a Dimension Training Wheels.

⚠ **WARNING:** CYCLING CAN BE DANGEROUS. BICYCLE PRODUCTS SHOULD BE INSTALLED AND SERVICED BY A PROFESSIONAL MECHANIC. NEVER MODIFY YOUR BICYCLE OR ACCESSORIES. READ AND FOLLOW ALL PRODUCT INSTRUCTIONS AND WARNINGS INCLUDING INFORMATION ON THE MANUFACTURER'S WEBSITE. INSPECT YOUR BICYCLE BEFORE EVERY RIDE. ALWAYS WEAR A HELMET.

For additional product and safety information go to:
www.dimensionbikeproducts.com/safety

COMPATIBILITY & INTENDED USE

Training wheels are intended for use with most 12, 16, 18, or 20" wheeled bicycles that use a solid axle with nuts that attach the rear wheel in the frame.

Recommended for ages 3 years and up. Maximum rider weight is 60 lb (27kg).

⚠ **WARNING:** Exceeding rider weight may cause the product to bend or break, resulting in a fall. This product is not intended for use by adults or riders weighing more than 60 lb.

INCLUDED PARTS

6 washers

2 lock washers

2 shoulder bolts

2 wheels

4 14mm nuts

2 wheel brackets

2 wheel stabilizer brackets

TOOLS REQUIRED

Box wrench to fit your frame's axle nuts

14mm box wrench

Torque wrench that measures in Newton meters

⚠ WARNING:

- Adult supervision required at all times: an adult should accompany the child rider and instruct them on proper riding technique. Ride on smooth, paved surfaces away from motor vehicles. A child using training wheels should not ride near steps, sloped driveways, hills, roadways, alleys, or swimming pools. Do not allow riding at dusk, at night or at times of limited visibility.
- The child rider should wear protective clothing while riding, including an approved helmet and shoes
- Ensure that all parts of the bicycle and training wheels are securely tightened and in good condition before each ride
- Do not remove the stabilizer brackets. Doing so may allow the brackets to turn or become damaged, resulting in a fall
- Training wheels prevent bicycles from achieving their regular lean angle when turning. Turning suddenly or at a fast speed may cause a fall. Teach the child rider to ride and turn slowly and monitor their riding
- Ensure that the bicycle is the correct size for the rider and that the saddle height and handlebar are adjusted appropriately

ASSEMBLY

1. Attach wheel to wheel bracket using the shoulder bolt. Placing a washer on each side of the wheel, insert the shoulder bolt through the wheel and thread on a 14mm nut, leaving about .5mm of space between the washers and the wheel to allow the wheel to rotate. Place a lock washer next to the first nut and then insert the threaded end of the shoulder bolt into the wheel bracket. Add another flat washer and 14mm nut and tighten to 30Nm.
2. Insert wheel bracket into the stabilizer bracket. The wheel bracket has several holes through which to insert the axle. Which hole you use will depend on the wheel size of the bike. From the top, the holes are drilled for 20, 18, 16, and 12" wheels.
3. Remove the axle nut from the rear wheel of the bicycle and place the stabilizer and wheel bracket onto the axle end. Ensure that the recess in the stabilizer bar engages the frame tube of the bicycle. Replace the axle nut and tighten it securely. Repeat on the other side of the bicycle.
4. Check to see that there is no more than 25mm of clearance between each wheel and the ground when the bicycle is held upright at 90°, and that the training wheels extend a minimum of 175mm from the center of the bicycle's rear wheel (see figure 1).

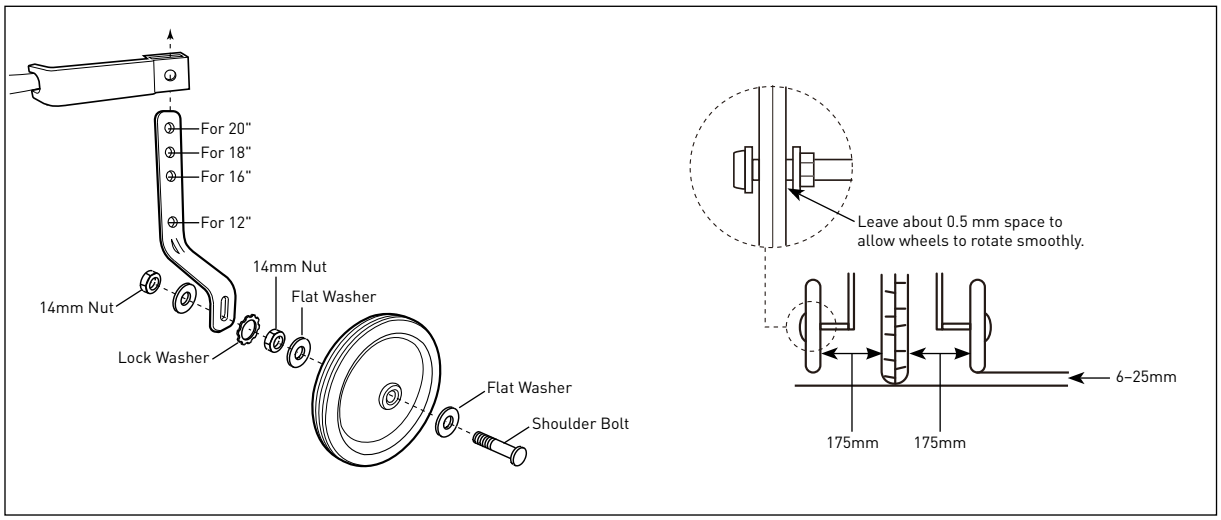

Figure 1

6400 WEST 105TH STREET
BLOOMINGTON, MN 55438
info@dimensionbikeproducts.com
1-855-883-6563

18550 8/16

DIMENSION
BICYCLE COMPONENTS

DIMENSION TRAINING WHEELS INSTRUCTIONS

ONGOING MAINTENANCE:

Lubricate between the wheel and support bracket regularly. Check all bolts and nuts before each ride to ensure proper tightness. Contact your local dealer for appropriate replacement parts.

LIMITED 2-YEAR WARRANTY

Dimension warrants this new Dimension product against defects in materials and workmanship for two (2) years from the original date of retail purchase by the consumer. This limited warranty is expressly limited to the repair or replacement of the original product, at the option of Dimension, and is the sole remedy of the warranty. This limited warranty applies only to the original purchaser of the Dimension product and is not transferable. In no event shall Dimension be liable for any loss, inconvenience or damage, whether direct, incidental or consequential or otherwise resulting from breach of any express or implied warranty or condition of merchantability, fitness for a particular purpose, or otherwise with respect to this product except as set forth herein. This warranty gives the consumer specific legal rights, and those rights and other rights may vary from state to state.

This warranty does not cover the following:

- Damage due to improper assembly or follow-up maintenance or lack of skill, competence or experience of the end user
- Products that have been modified, neglected, used in competition or for commercial purposes, misused or abused, involved in accidents or anything other than normal use
- Damage or deterioration to the surface finish, aesthetics or appearance of the product
- Normal wear and tear
- Labor required to remove and/or refit and re-adjust the product within the bicycle assembly
- Installation of components, parts, or accessories not originally intended for or compatible with Dimension products

TO THE EXTENT NOT PROHIBITED BY LAW, THESE WARRANTIES ARE EXCLUSIVE AND THERE ARE NO OTHER EXPRESS OR IMPLIED WARRANTIES OR CONDITIONS INCLUDING WARRANTIES OR CONDITIONS OF MERCHANTABILITY AND FITNESS FOR A PARTICULAR PURPOSE.

6400 WEST 105TH STREET
BLOOMINGTON, MN 55438
info@dimensionbikeproducts.com
1-855-883-6563

18550 8/16

DIMENSION
BICYCLE COMPONENTS